FOR-1754 Rev.1.1

未注公差/General tolerances(mm)														
0 ~ 3	>3 ~ 6	>6 ~ 10	>10 ~ 18	>18 ~ 30	>30 ~ 50	>50 ~ 80	>80 ~ 120	>120 ~ 180	>180 ~ 250	>250 ~ 315	>315 ~ 400	>400 ~ 500	>500	0.1/10
±0.12	±0.18	±0.22	±0.26	±0.31	±0.37	±0.57	±0.80	±0.93	±1.05	±1.15	±1.60	±2.20	±2.50	±2°

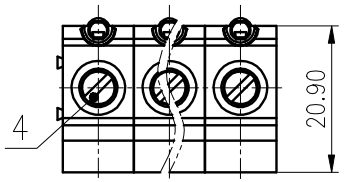

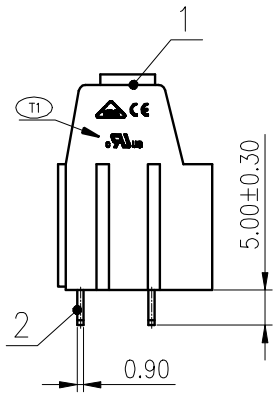

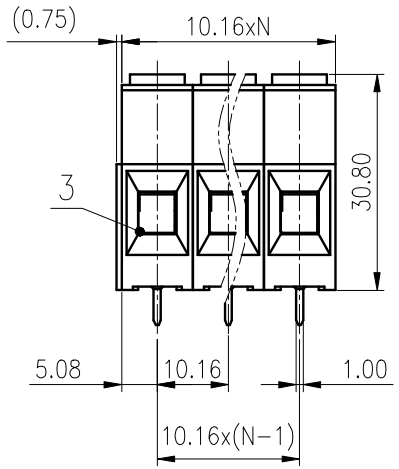

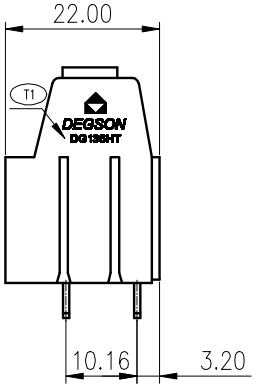

文管中心
研发专用
2020.05.16
(仅限内部使用,对外无效)

ITEM	NAME OF PART	MATERIAL	NOTES
4	Screw	Copper alloy	M4/Ni Plated
3	Cage	Copper alloy	M4/Ni Plated
2	Pin header	Copper	Sn Plated
1	Housing	PA66	UL94V-0

UL 标准/UL Standard:	B	C	D
额定电压/电流/Rated Voltage(V)/Current(A)	300/60	300/60	/

IEC 标准/IEC Standard:	
过压类别/Overvoltage Category/污染等级/Pollution Degree	Ⅲ/2
额定电压/电流/Rated Voltage(V)/Current(A)	1000/65
工频耐压/Withstanding voltage(AC V/1Min)	3500
螺丝扭矩/Torque Tightening(N·m/Lb.in)	M4, 1.2/10.53
线径范围(硬线和软线)/Wire Range(rigid and flexible)(mm^2/AWG)	2.5~16/20~6
间距/Pitch(mm)/线数范围/Poles	10.16/N=1~12P
剥线长度/Stripping length(mm)	10-11
使用温度范围/Operating temperature(℃)	-40~+105
符合RoHS环保要求/Conform to RoHS	Yes

PCB LAYOUT

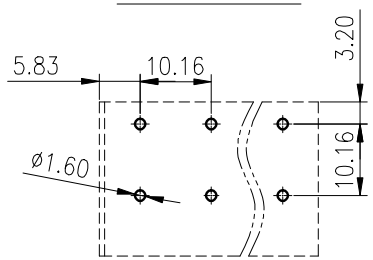

REV	ECN	DESCRIPTION	DRFT	DATE

MATERIAL: / SURFACE: /

MAT NO.: /

STATUS: /

APPD: LanChH 2020.05.16

CHKD: YuJZh 2020.05.16

DRFT: CMZ 2018.01.18

SIZE: A4 mm (inch)

DEGSON®

宁波高松电子有限公司
NINGBO DEGSON ELECTRICAL CO., LTD

NAME: DG136HT-10.16-XXP-1Y-00A(H)

DRAWING NO.: DG136HT-10.16-C01 REV T2

TYPE: CUSTOMER DRAWING SCALE: 1:1 SHEET 1/1