未注公差/General tolerances(mm)														
0 ~ 3	>3 ~ 6	>6 ~ 10	>10 ~ 18	>18 ~ 30	>30 ~ 50	>50 ~ 80	>80 ~ 120	>120 ~ 180	>180 ~ 250	>250 ~ 315	>315 ~ 400	>400 ~ 500	>500	0.1/10
±0.12	±0.18	±0.22	±0.26	±0.31	±0.37	±0.57	±0.80	±0.93	±1.05	±1.15	±1.60	±2.20	±2.50	±2°

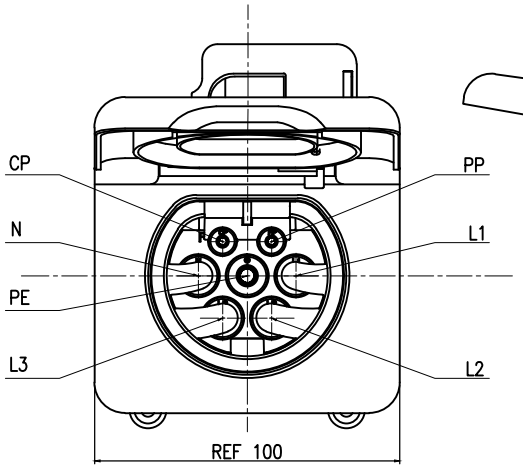

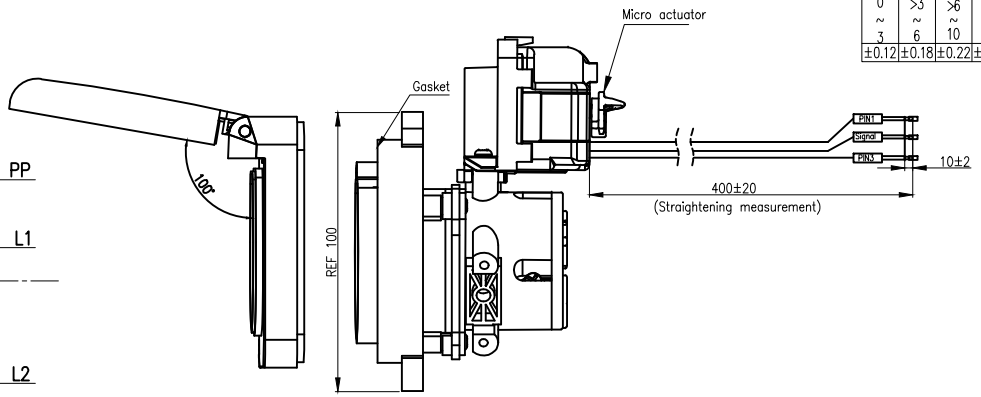

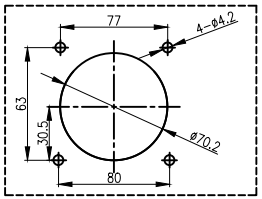

Installation plate dimension

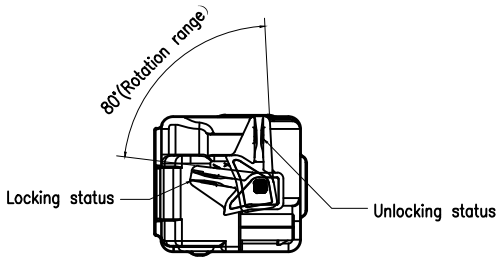

Micro actuator diagram

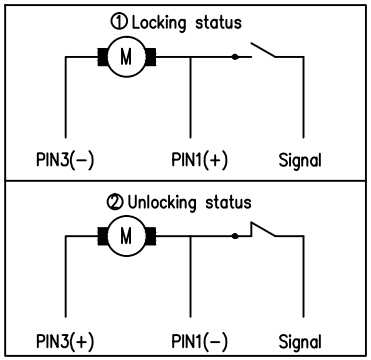

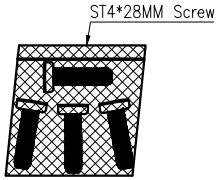

Laser Printing:

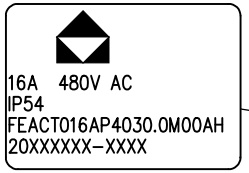

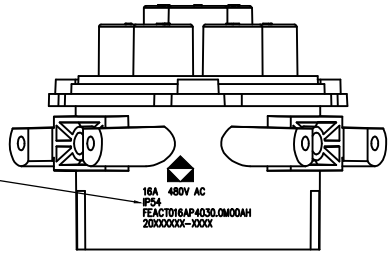

Connection Mode:

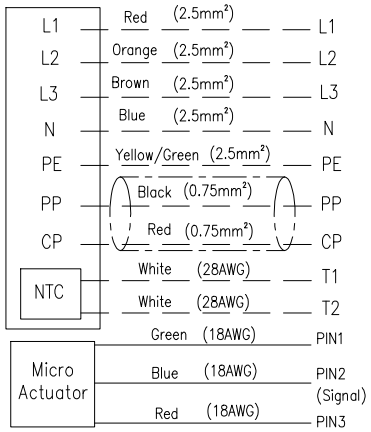

Micro actuator parameters:
Rated Voltage: DC 12V
Operating Voltage : 9–15.5 V
Current consumption: <2.4A
Reactive Time: 40ms< t < 200ms
① PIN 1 +, PIN3 −: The switch will be disconnected in Locking status
② PIN 1 −, PIN3 +: The switch will be connected in unlocking status
PIN 2: signal
H −Bridge is necessary for polarity change

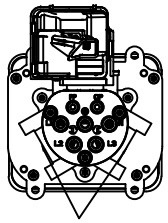

Micro actuator can be installed

额定电压电流/Rated voltage/Current	480V AC/16A
绝缘电阻/Insulation resistance	>100MΩ,500V DC 1min
耐压/Withstanding voltage	L、N and PE ,2500V AC 1min
	L and N ,2500V AC 1min
防护等级/Ingress protection	IP54
插拔寿命/Insertion/Pullout times	10,000 times
插拔力/Insertion/Pullout force	<100N
使用温度范围/Operating temperature(°C)	−30~+50
标准/Reference standard	IEC 62196−2:2016
符合RoHS环保要求/Conform to RoHS	Yes

DEGSON

APPD:	Ye DB	2024.09.13
CHKD:	Dong RT	2024.09.13
DRFT:	Rong QX	2024.09.13

MATERIAL: | SURFACE/COLOR:
MAT NO./REV: DO−1 | MAT STATUS:

NAME: FEAC−T−016A−P4−03−0.0M−00A(H)

DRAWING NO.	TYPE	DRAWING STATUS	SCALE	SHEET
	CUSTOMER DRAWING		1:3	1/1

REV	ECN	DESCRIPTION	DRFT	DATE

A4

Transfer or publication of this document as well as the utilization or communication of its contents are prohibited unless explicit authorization is granted. Violations will be liable for compensation. All rights reserved for patent, utility model or designs registrations. 除非经予明确授权，否则禁止转让、复制、利用、交流本文件的内容。侵犯者将负赔偿责任。本公司保留对涉及发明、实用新型或外观专利的所有权利。