未注公差/General tolerances(mm)														
0 ~ 3	>3 ~ 6	>6 ~ 10	>10 ~ 18	>18 ~ 30	>30 ~ 50	>50 ~ 80	>80 ~ 120	>120 ~ 180	>180 ~ 250	>250 ~ 315	>315 ~ 400	>400 ~ 500	>500	0.1/10
±0.12	±0.18	±0.22	±0.26	±0.31	±0.37	±0.57	±0.80	±0.93	±1.05	±1.15	±1.60	±2.20	±2.50	±2°

UL 标准/UL Standard:	B	C	D
额定电压/电流/Rated Voltage(V)/Current(A)	300/30	300/30	300/10
UL工频耐压/R.M.S withstand voltage	AC1600V/1Min.		
螺丝扭矩/Torque Tightening(N· m/Lb.in)	M4, 1.2/10.6		
线径范围(硬线和软线)/Wire Range(rigid and flexible)(AWG)	22～10		
间距/Pitch(mm)/线数范围/Poles	9.50/N＝02～14P		
剥线长度/Stripping length(mm)	6～7		
使用温度范围/Operating temperature(℃)	-40～＋105		
符合RoHS环保要求/Conform to RoHS	Yes		

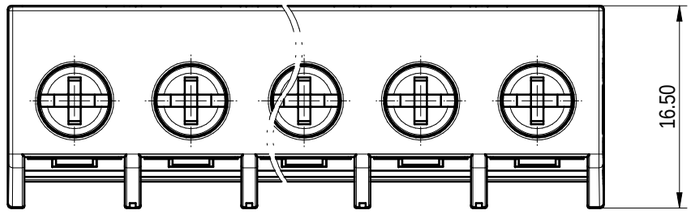

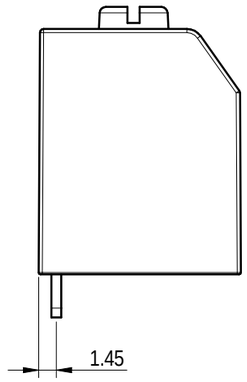

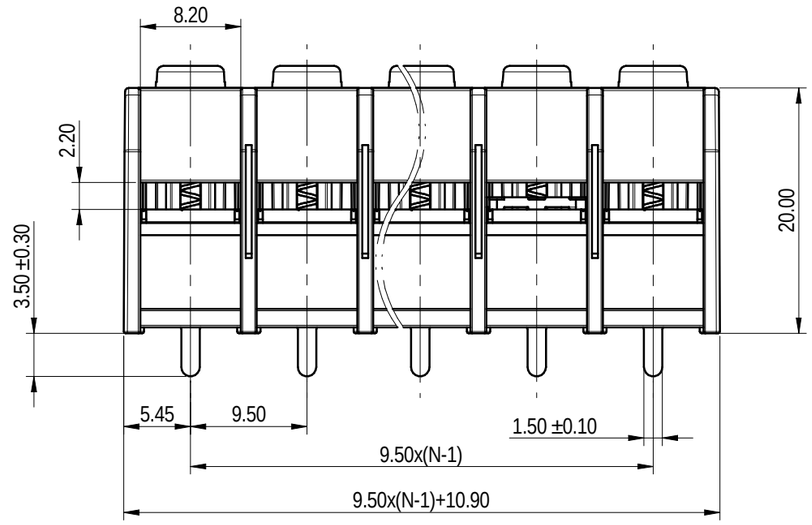

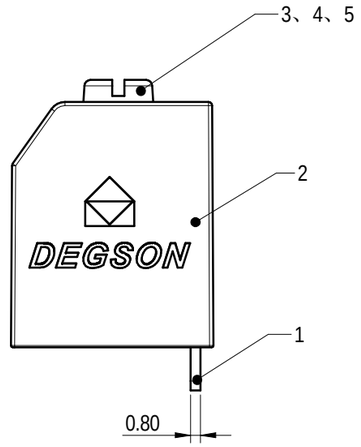

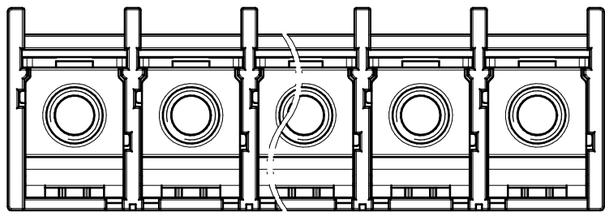

PCB LAYOUT

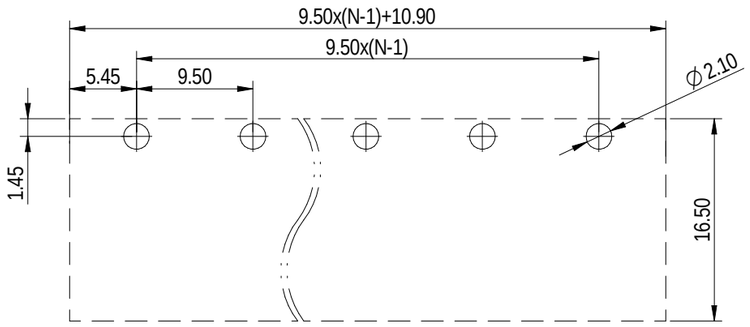

ITEM	NAME OF PART	MATERIAL	NOTES
5	Screw	Steel	M4/Ni Plated
4	Shim	Steel	Ni Plated
3	Spring	SUS304	/
2	*Housing*	PA66+GF	UL94V-0
1	Pin header	Copper alloy	Sn Plated

REV	ECN	DESCRIPTION	DRFT	DATE
00			汪德荣	2023.7.12

DEGSON

APPD:	蓝贵凡	2023.7.12
CHKD:	曹利彬	2023.7.12
DRFT:	汪德荣	2023.7.12

A3 mm (inch)

MATERIAL: / SURFACE/COLOR: /

MAT NO./REV: / /00 MAT STATUS: /

NAME DG46SU-XXP-1Y-00Z(H)

DRAWING NO.	TYPE	DRAWING STATUS	SCALE	SHEET
200201657	CUSTOMER DRAWING	/	1:1	1/1

Transfer or duplication of this document as well as the utilization or communication of its contents are prohibited unless explicit authorization is granted. Violations will be liable for compensation. All rights reserved for patent, utility model or designs registrations. 该手稿平明禁止未经授权，不得复制、利用、交流本文件的内容，侵犯者将负赔偿责任。本公司保留对外发明、实用新型和外观专利的所有权利。