未注公差/General tolerances(mm)														
0 ~ 3	>3 ~ 6	>6 ~ 10	>10 ~ 18	>18 ~ 30	>30 ~ 50	>50 ~ 80	>80 ~ 120	>120 ~ 180	>180 ~ 250	>250 ~ 315	>315 ~ 400	>400 ~ 500	>500	0.1/10
±0.12	±0.18	±0.22	±0.26	±0.31	±0.37	±0.57	±0.80	±0.93	±1.05	±1.15	±1.60	±2.20	±2.50	±2'

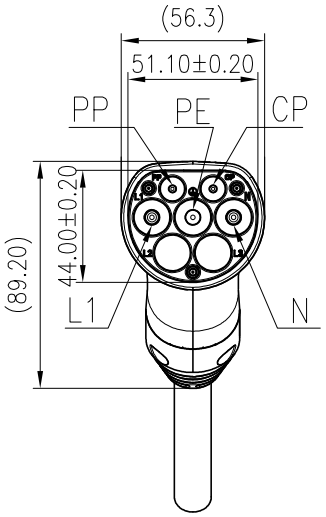

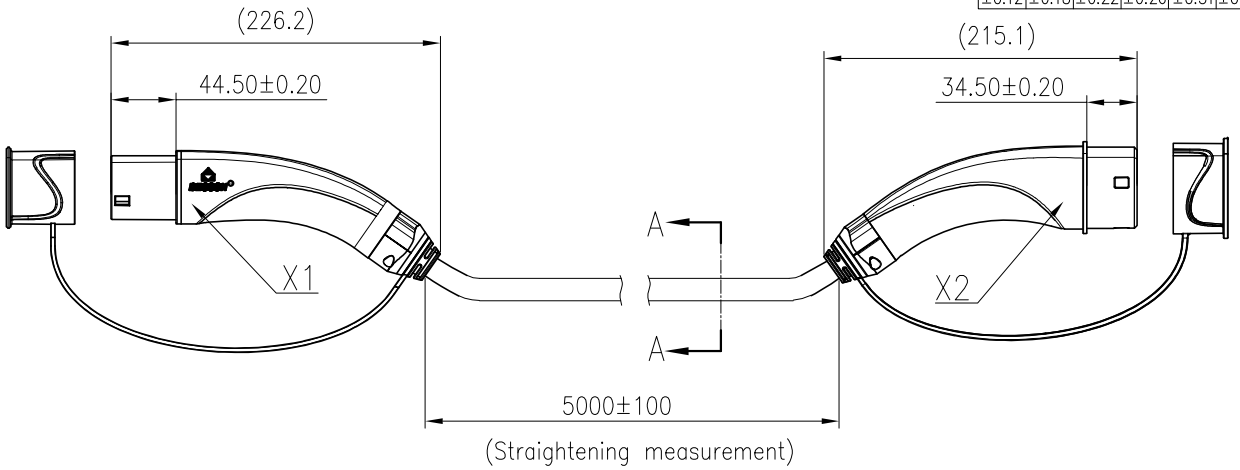

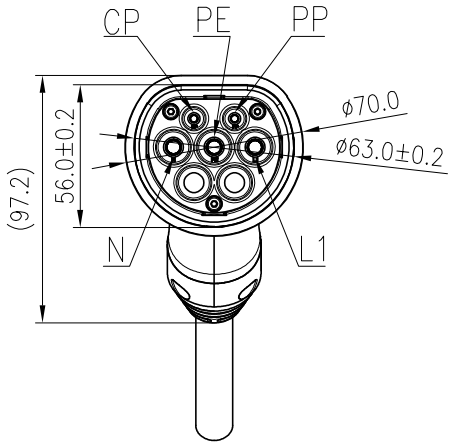

Wiring diagram

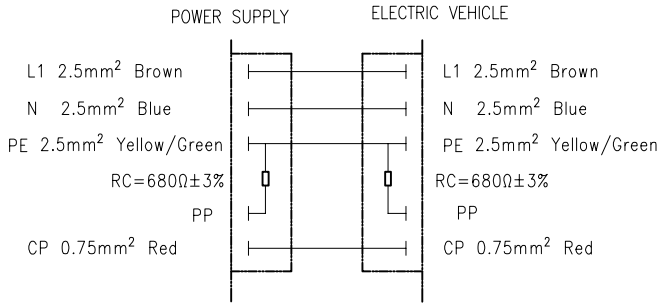

X1

Laser Printing Front Note:

DEGSON®

Laser Printing Back Note(Arial):
MEAC-S-020A-P22-03-5.0M-20AH
20A 250V AC
IEC 62196-2:2022
IP67
20xxxxxx-xxxx

X2

Laser Printing Front Note(Arial):
MEAC-S-020A-V22-03-5.0M-20AH
20A 480V AC
IEC 62196-2:2022
IP67
20xxxxxx-xxxx

Laser Printing Front Note:

DEGSON®

A–A

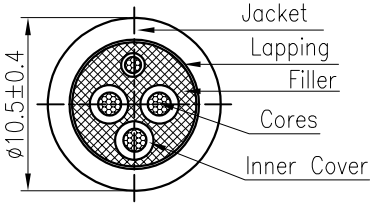

额定电压电流/Rated Voltage/Current	250V AC/20A
绝缘电阻/Insulate Resistance	>100MΩ,500V DC 1min
耐压/Withstanding Voltage	L、N and PE ,2500V AC 1min L and N ,2500V AC 1min
防护等级/Ingress Protection	IP67
插拔寿命/Insertion/Pullout Times	10,000 Times
插拔力/Insertion/Pullout Force	<100N
使用温度范围/Operating temperature(°C)	−30~+50
线材规格/Cable specification	3*2.5mm²+1*0.75mm² Black
标准/Reference standard	IEC 62196-2:2022
符合RoHS环保要求/Conform to RoHS	Yes

DEGSON	MATERIAL:		SURFACE/COLOR:		
	MAT NO./REV:	/ D0-1	MAT STATUS:		
APPD:	NAME	MEAC-S-020A-V22P22-03-5.0M-10A(H)			
CHKD:					
DRFT: Rong QX 2024.12.17	DRAWING NO.	TYPE CUSTOMER DRAWING	DRAWING STATUS	SCALE 1:3	SHEET 1/1
A4 mm (inch)					

REV	ECN	DESCRIPTION	DRFT	DATE

Transfer or duplication of this document as well as the utilization or communication of its contents are prohibited unless explicit authorization is granted. Violations will be liable for compensation. All rights reserved for patent, utility model or designs registrations. 除非经予明确授权，否则禁止转让、复制、利用、交流本文件的内容。违反者将负赔偿责任。本公司保留对涉及发明、实用新型或外观专利的所有权利。